FB-7 / FB-8

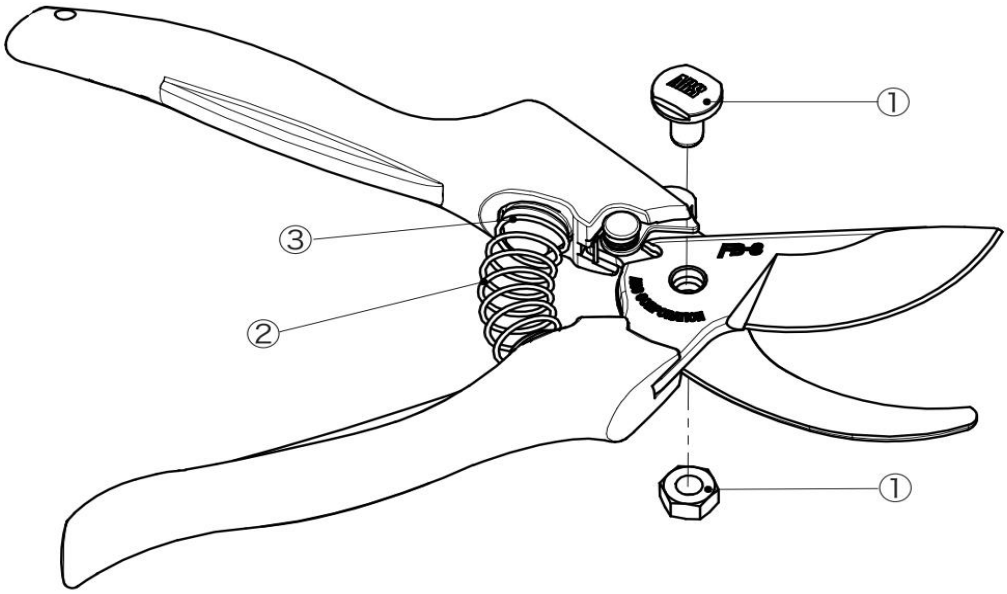

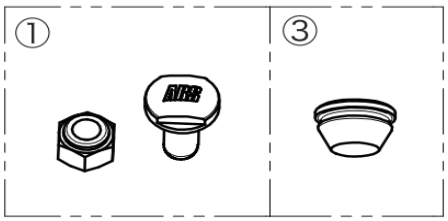

PARTS NO.	SPECIFICATION	PARTS NO.	SPECIFICATION
① SP-14	BOLT & NYLON NUT FOR 120/130/140/		
	140L/DX/B,120EU/EU-R/FB		
② SP-157	SPRING FOR 120EU/120EU-R/FB		
③ SP-151	RUBBER CUSHION FOR VS-8X/9X, CB-Z &		
	FB SERIES (BLACK, 1PC)		